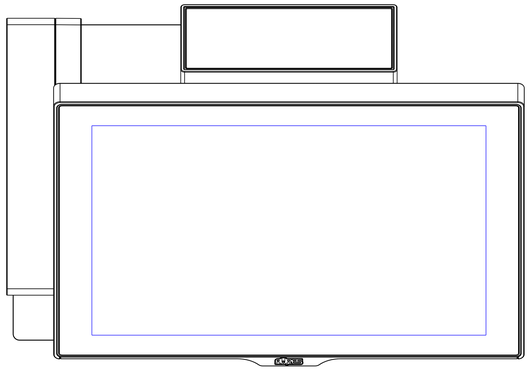

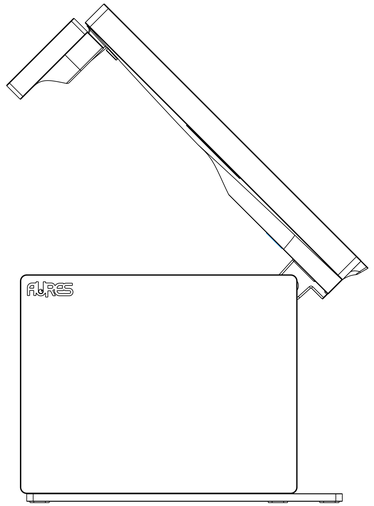

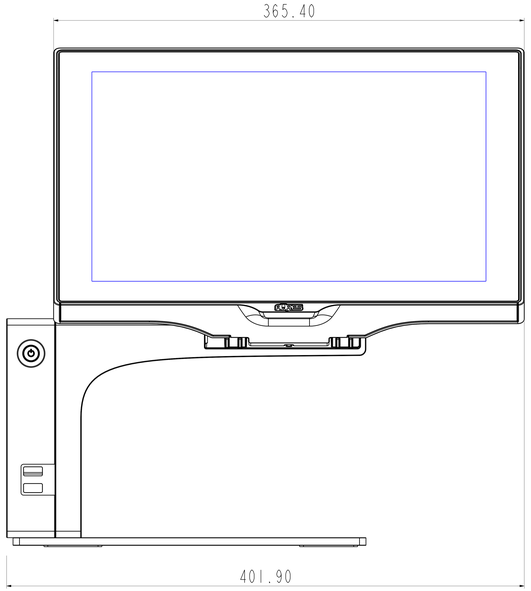
365.40
401.90

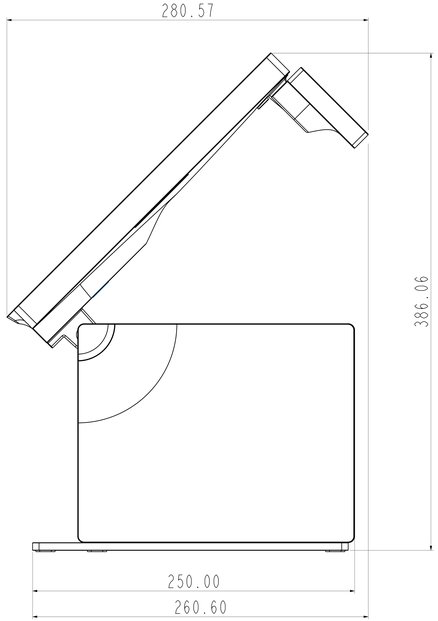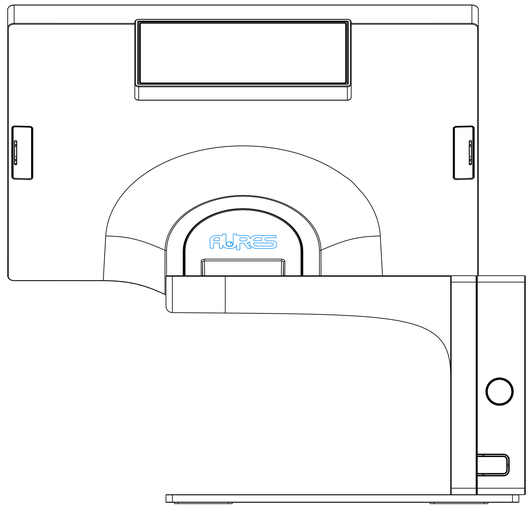
280.57
386.06
250.00
260.60